Institute of Control and Computation Engineering
Warsaw University of Technology

Actuator fault toleration in control systems with analytical predictive controllers and output constraints

Piotr Marusak

Plan of presentation

1. Introduction
2. Analytical predictive algorithms
3. Introducing information about actuator faults into a control system
   3.1. Basic reconfiguration of the analytical predictive controllers
   3.2. Introduction of an additional manipulated variable into analytical predictive controllers
   3.3. Better stabilization of the chosen output
   3.4. Reconfiguration of the economic optimization problem in response to actuator blockade
4. Simulation experiments
5. Summary

Introduction

- Numerical predictive algorithms – fault tolerance achieved by modifications of the optimization problem
- Analytical predictive controllers – the change of the parameters and structure is needed (usage of constraints limited)
- Continuation of control system operation till the actuator fault is fixed; precise stabilization of the chosen output variable
- Modifications in the economic optimization layer (usage of the precise steady–state process model)
- Methods of detection and isolation of actuator faults are available, measurement of the actuator output, in particular

The idea of the predictive control

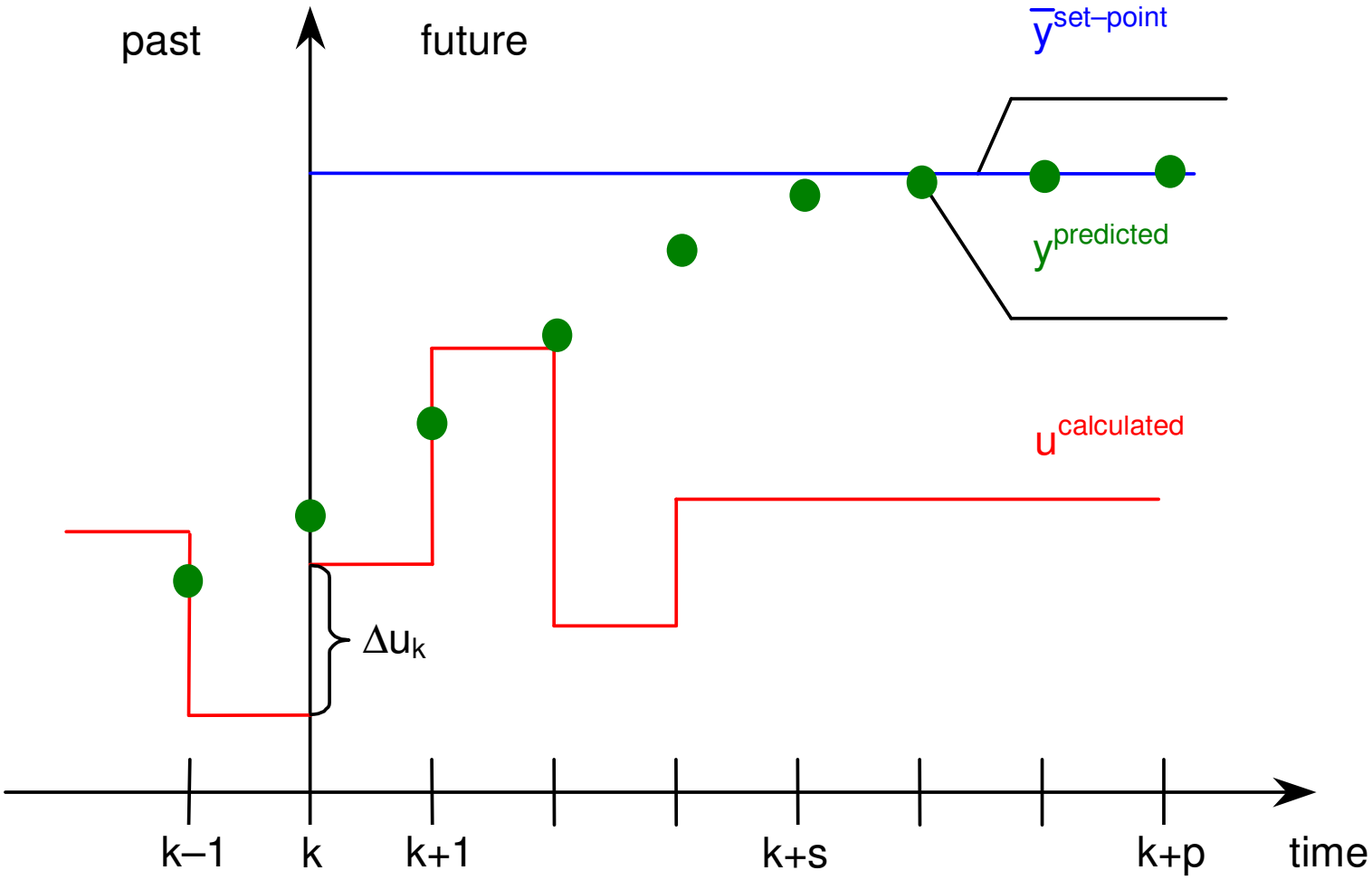

Fig. 1. Idea of predictive control; p – prediction horizon, s – control horizon, Δu_k – control signal change at current iteration

Advantages of the predictive controllers

- Possibility of taking into consideration:

  — constraints (limited in the case of analytical controllers),
  — future set–point changes,
  — future disturbance changes,
  — information about the fault,

- Algorithms for MIMO plants can be designed relatively easy

Analytical predictive control algorithms

The basic idea of the predictive algorithms is to minimize the following performance index:

$$J = \sum_{j=1}^{n_y} \sum_{i=1}^{p} \kappa_j \cdot \left(\bar{y}_k^j - y_{k+i|k}^j \right)^2 + \sum_{j=1}^{n_u} \sum_{i=0}^{s-1} \lambda_j \cdot \left(\Delta u_{k+i|k}^j \right)^2$$

Analytical predictive control algorithms

The basic idea of the predictive algorithms is to minimize the following performance index:

$$J = \left(\bar{\boldsymbol{y}} - \boldsymbol{y}\right)^T \cdot \boldsymbol{\kappa} \cdot \left(\bar{\boldsymbol{y}} - \boldsymbol{y}\right) + \Delta \boldsymbol{u}^T \cdot \boldsymbol{\lambda} \cdot \Delta \boldsymbol{u}$$

Analytical predictive control algorithms

The basic idea of the predictive algorithms is to minimize the following performance index:

$$J = (\bar{\boldsymbol{y}} - \boldsymbol{y})^T \cdot \boldsymbol{\kappa} \cdot (\bar{\boldsymbol{y}} - \boldsymbol{y}) + \Delta \boldsymbol{u}^T \cdot \boldsymbol{\lambda} \cdot \Delta \boldsymbol{u}$$

where

Free response

$$\boldsymbol{y} = \tilde{\boldsymbol{y}} + \boldsymbol{A} \cdot \Delta \boldsymbol{u} = \left[y^1_{k+1|k}, \ldots, y^1_{k+p|k}, y^2_{k+1|k}, \ldots, y^2_{k+p|k}, \ldots, y^{n_y}_{k+1|k}, \ldots, y^{n_y}_{k+p|k} \right]^{\mathrm{T}}$$

$$\tilde{\boldsymbol{y}} = \left[\tilde{y}^1_{k+1|k}, \ldots, \tilde{y}^1_{k+p|k}, \tilde{y}^2_{k+1|k}, \ldots, \tilde{y}^2_{k+p|k}, \ldots, \tilde{y}^{n_y}_{k+1|k}, \ldots, \tilde{y}^{n_y}_{k+p|k} \right]^{\mathrm{T}}$$

Analytical predictive control algorithms

The basic idea of the predictive algorithms is to minimize the following performance index:

$$J = (\bar{\boldsymbol{y}} - \boldsymbol{y})^T \cdot \boldsymbol{\kappa} \cdot (\bar{\boldsymbol{y}} - \boldsymbol{y}) + \Delta \boldsymbol{u}^T \cdot \boldsymbol{\lambda} \cdot \Delta \boldsymbol{u}$$

where

Dynamic matrix

$$\boldsymbol{y} = \tilde{\boldsymbol{y}} + \boldsymbol{A} \cdot \Delta \boldsymbol{u} = \left[y^1_{k+1|k}, \ldots, y^1_{k+p|k}, y^2_{k+1|k}, \ldots, y^2_{k+p|k}, \ldots, y^{n_y}_{k+1|k}, \ldots, y^{n_y}_{k+p|k} \right]^{\mathrm{T}}$$

$$\Delta \boldsymbol{u} = \left[\Delta u^1_{k|k}, \ldots, \Delta u^1_{k+s-1|k}, \Delta u^2_{k|k}, \ldots, \Delta u^2_{k+s-1|k}, \ldots, \Delta u^{n_u}_{k|k}, \ldots, \Delta u^{n_u}_{k+s-1|k} \right]^{\mathrm{T}}$$

$$\boldsymbol{A} = \begin{bmatrix} \boldsymbol{A}_{11} & \boldsymbol{A}_{12} & \cdots & \boldsymbol{A}_{1n_u} \\ \boldsymbol{A}_{21} & \boldsymbol{A}_{22} & \cdots & \boldsymbol{A}_{2n_u} \\ \vdots & \vdots & \ddots & \vdots \\ \boldsymbol{A}_{n_y 1} & \boldsymbol{A}_{n_y 2} & \cdots & \boldsymbol{A}_{n_y n_u} \end{bmatrix} \boldsymbol{A}_{mn} = \begin{bmatrix} a^{m,n}_1 & 0 & \cdots & 0 & 0 \\ a^{m,n}_2 & a^{m,n}_1 & \cdots & 0 & 0 \\ \vdots & \vdots & \ddots & \vdots & \vdots \\ a^{m,n}_p & a^{m,n}_{p-1} & \cdots & a^{m,n}_{p-s+2} & a^{m,n}_{p-s+1} \end{bmatrix}$$

Analytical predictive control algorithms

The basic idea of the predictive algorithms is to minimize the following performance index:

$$J = \left(\bar{\boldsymbol{y}} - \boldsymbol{y}\right)^T \cdot \boldsymbol{\kappa} \cdot \left(\bar{\boldsymbol{y}} - \boldsymbol{y}\right) + \Delta\boldsymbol{u}^T \cdot \boldsymbol{\lambda} \cdot \Delta\boldsymbol{u}$$

A unique solution

$$\Delta\boldsymbol{u} = \left(\boldsymbol{A}^T \cdot \boldsymbol{\kappa} \cdot \boldsymbol{A} + \boldsymbol{\lambda}\right)^{-1} \cdot \boldsymbol{A}^T \cdot \boldsymbol{\kappa} \cdot \left(\bar{\boldsymbol{y}} - \tilde{\boldsymbol{y}}\right)$$

Only the $\Delta u_{k|k}^{j}$ elements of the vector $\Delta\boldsymbol{u}$ are used at each time step. The control law can be obtained.

Control law

DMC algorithm

$$\Delta u_{k|k}^{j} = \boldsymbol{r}_0^{j} \cdot \boldsymbol{e}_k + \sum_{i=1}^{p_d-1} \boldsymbol{r}_i^{j} \cdot \Delta \boldsymbol{u}_{k-i}$$

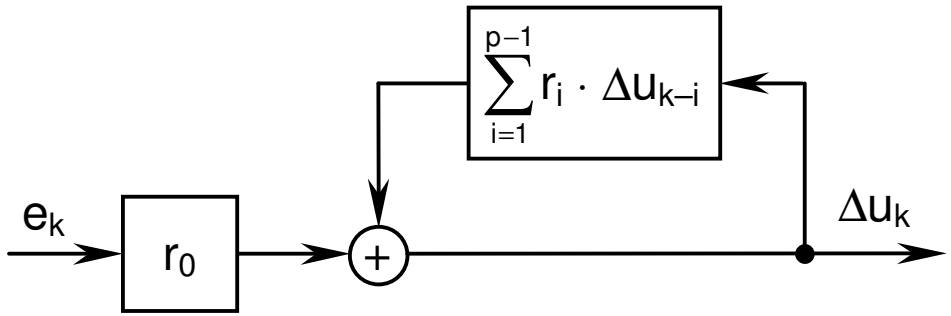

Fig. 2. Block diagram of the analytical DMC controller

Algorithm based on difference equation plant model

$$\Delta u_{k|k}^{j} = \boldsymbol{r}_e^{j} \cdot \boldsymbol{e}_k + \sum_{i=1}^{m-1} \boldsymbol{r}_u^{i,j} \cdot \Delta \boldsymbol{u}_{k-i} + \sum_{i=1}^{n+1} \boldsymbol{r}_y^{i,j} \cdot \boldsymbol{y}_{k-i+1}$$

Taking constraints into consideration in analytical algorithms

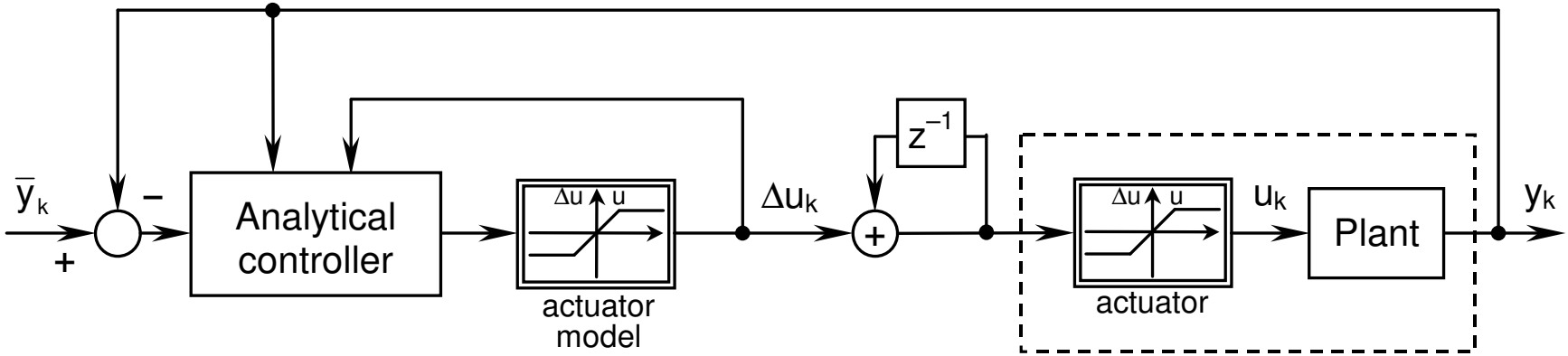

Fig. 3. Block diagram of the control system with analytical predictive controller and constraints included in the controller

Constraints put on:

- control changes

If $\Delta u_k < \Delta u_{min}$, then
$\Delta u_k = \Delta u_{min}$.
If $\Delta u_k > \Delta u_{max}$, then
$\Delta u_k = \Delta u_{max}$.

- control values

If $u_{k-1} + \Delta u_k < u_{min}$, then
$\Delta u_k = u_{min} - u_{k-1}$.
If $u_{k-1} + \Delta u_k > u_{max}$, then
$\Delta u_k = u_{max} - u_{k-1}$.

Basic reconfiguration of the analytical predictive controllers

1. A passive approach
2. Modification of constraints
3. Modification of the control plant model

1. *Passive approach**

- No information needed
- Mechanism of constraint inclusion in predictive algorithms is used
- Gives the worst and sometimes even unacceptable results

* J.M. Maciejowski: *The implicit daisy–chaining property of constrained predictive control*; Applied Mathematics and Computer Science, vol. 8, pp. 695–711, 1998.

2. *Modification of the constraints*

- Equality constraints are added to algorithms (after fault detection)

  — analytical algorithms (one constraint):

$$\Delta u_{k|k}^{f} = 0$$

  — numerical algorithms (a set of constraints):

$$\Delta u_{k+i|k}^{f} = 0, i = 0, \ldots, s-1$$

  f – number of control signal affected by the failure

- Application is relatively easy
- Good results especially in the case of numerical algorithms

3. *Modification of the control plant model*

- Practically for analytical algorithms
- Consists in using a modified control plant model with only those manipulated inputs that are not affected by a blockade
- Elimination of columns of the dynamic matrix describing the dependence of the outputs on the manipulated variable affected by the fault

$$\boldsymbol{A} = \begin{bmatrix} \boldsymbol{A}_{11} & \cdots & \boldsymbol{A}_{1f} & \cdots & \boldsymbol{A}_{1n_u} \\ \boldsymbol{A}_{21} & \cdots & \boldsymbol{A}_{2f} & \cdots & \boldsymbol{A}_{2n_u} \\ \vdots & \ddots & \vdots & \ddots & \vdots \\ \boldsymbol{A}_{n_y 1} & \cdots & \boldsymbol{A}_{n_y f} & \cdots & \boldsymbol{A}_{n_y n_u} \end{bmatrix}$$

3. *Modification of the control plant model*

- Practically for analytical algorithms
- Consists in using a modified control plant model with only those manipulated inputs that are not affected by a blockade
- Elimination of columns of the dynamic matrix describing the dependence of the outputs on the manipulated variable affected by the fault
- A new controller parameters are derived using the modified model:

  — Control law calculated on–line

  — Failure scenarios prepared off–line

3. *Modification of the control plant model*

Control law calculated on–line

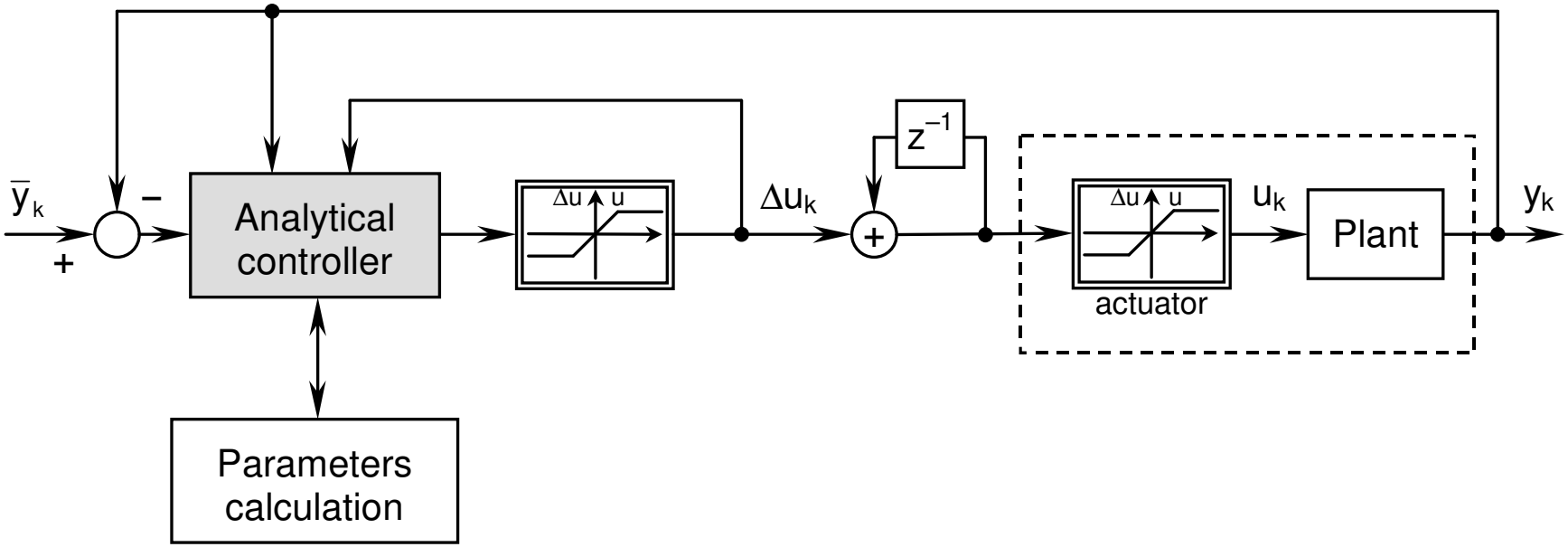

Fig. 5. Block diagram of the control system with analytical predictive controller and control law calculated on–line

3. *Modification of the control plant model*

Failure scenarios prepared off–line

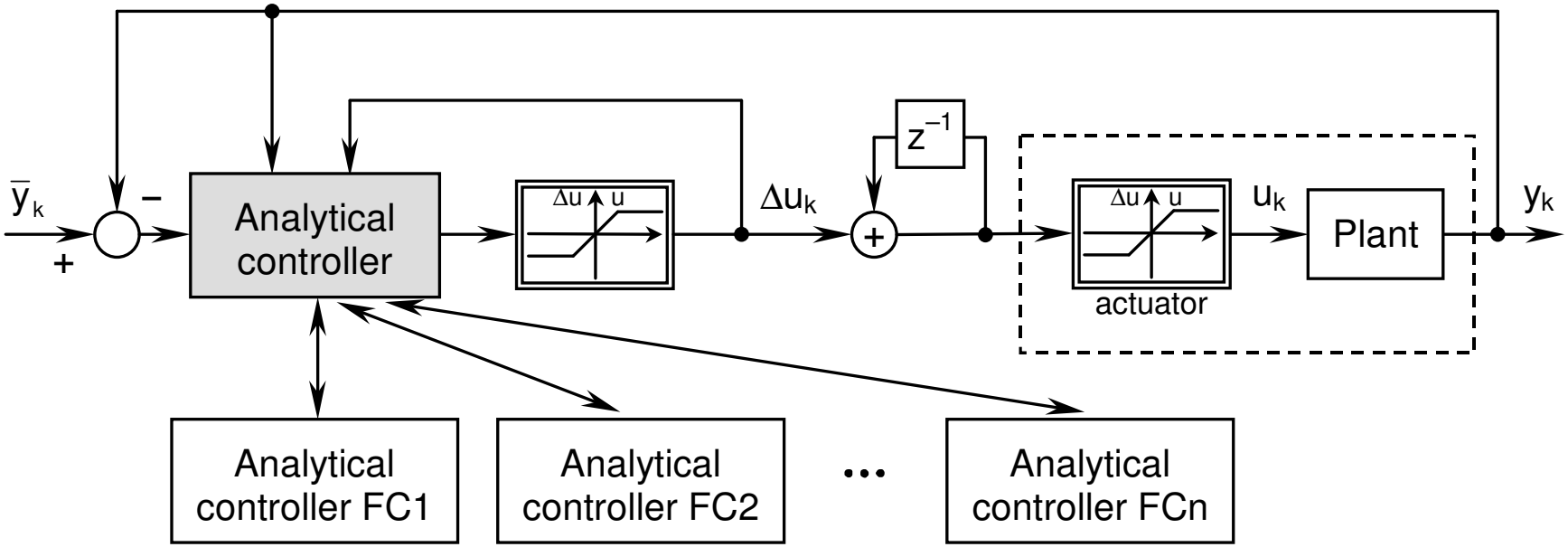

Fig. 6. Block diagram of the control system with analytical predictive controller and failure scenarios prepared off–line

Usage of an additional manipulated variable

- A change is relatively easy to introduce
- Consists in using an extended control plant model with an additional manipulated input
- The dynamic matrix should be supplemented with additional columns describing dependence of output variables on the added manipulated variable

$$\boldsymbol{A} = \begin{bmatrix} \boldsymbol{A}_{11} & \boldsymbol{A}_{12} & \cdots & \boldsymbol{A}_{1n_u} & \boldsymbol{A}_{1(n_u+1)} \\ \boldsymbol{A}_{21} & \boldsymbol{A}_{22} & \cdots & \boldsymbol{A}_{2n_u} & \boldsymbol{A}_{2(n_u+1)} \\ \vdots & \vdots & \ddots & \vdots & \vdots \\ \boldsymbol{A}_{n_y 1} & \boldsymbol{A}_{n_y 2} & \cdots & \boldsymbol{A}_{n_y n_u} & \boldsymbol{A}_{n_y (n_u+1)} \end{bmatrix}$$

Better stabilization of the chosen output

- If before the actuator blockade the number of manipulated variables was the same as the number of output variables then after the failure there are too little degrees of freedom to control all output variables
- The problem is especially important if constraints put on output variable values must be satisfied
- Typical approach: modification of κ_j weights in the performance index of the predictive controller
  - — increasing the value of the κ_j weight causes better stabilization of jth output
  - — a problem how to choose values of the κ_j weights

Better stabilization of the chosen output

- Elimination of predicted control errors of all outputs that need not be precisely stabilized from the performance index
  - — simplification of the controller structure
  - — elimination of the rows describing dependence of gth output variable on the manipulated variables from the dynamic matrix

$$\boldsymbol{A} = \begin{bmatrix} \boldsymbol{A}_{11} & \boldsymbol{A}_{12} & \cdots & \boldsymbol{A}_{1n_u} \\ \vdots & \vdots & \ddots & \vdots \\ \boldsymbol{A}_{g1} & \boldsymbol{A}_{g2} & \cdots & \boldsymbol{A}_{gn_u} \\ \vdots & \vdots & \ddots & \vdots \\ \boldsymbol{A}_{n_y 1} & \boldsymbol{A}_{n_y 2} & \cdots & \boldsymbol{A}_{n_y n_u} \end{bmatrix}$$

Economic optimization problem

$$\min_{\bar{\boldsymbol{y}},\bar{\boldsymbol{u}}} J_E(\bar{\boldsymbol{y}},\bar{\boldsymbol{u}})$$

subject to

$$\bar{\boldsymbol{u}}_{\min} \le \bar{\boldsymbol{u}} \le \bar{\boldsymbol{u}}_{\max}$$

$$\bar{\boldsymbol{y}}_{\min} + \bar{\boldsymbol{r}}_{\min} \le \bar{\boldsymbol{y}} \le \bar{\boldsymbol{y}}_{\max} - \bar{\boldsymbol{r}}_{\max}$$

$$\bar{\boldsymbol{y}} = F(\bar{\boldsymbol{u}},\tilde{\boldsymbol{w}})$$

$F : \Re^{n_u} \times \Re^{n_w} \to \Re^{n_y}$ is a steady–state plant model (u – inputs, y – outputs, w – disturbances)

- Precise nonlinear steady–state plant model

Modification of the economic optimization problem

- Equality constraint is added:

$$\bar{u}^{f} = u_{bl}^{f}$$

f – number of the manipulated variable affected by the fault

u_{bl}^{f} – output of the actuator

- Modification of constraints

$$\bar{\boldsymbol{y}}_{\min} + \bar{\boldsymbol{r}}_{\min} \le \bar{\boldsymbol{y}} \le \bar{\boldsymbol{y}}_{\max} - \bar{\boldsymbol{r}}_{\max}$$

by introducing the changes:

$$\bar{r}_{\min}^{j} = \bar{r}_{\min}^{j} + \bar{c}_{\min}^{j}, \quad \bar{r}_{\max}^{j} = \bar{r}_{\max}^{j} + \bar{c}_{\max}^{j}$$

Control plant (evaporator system)*

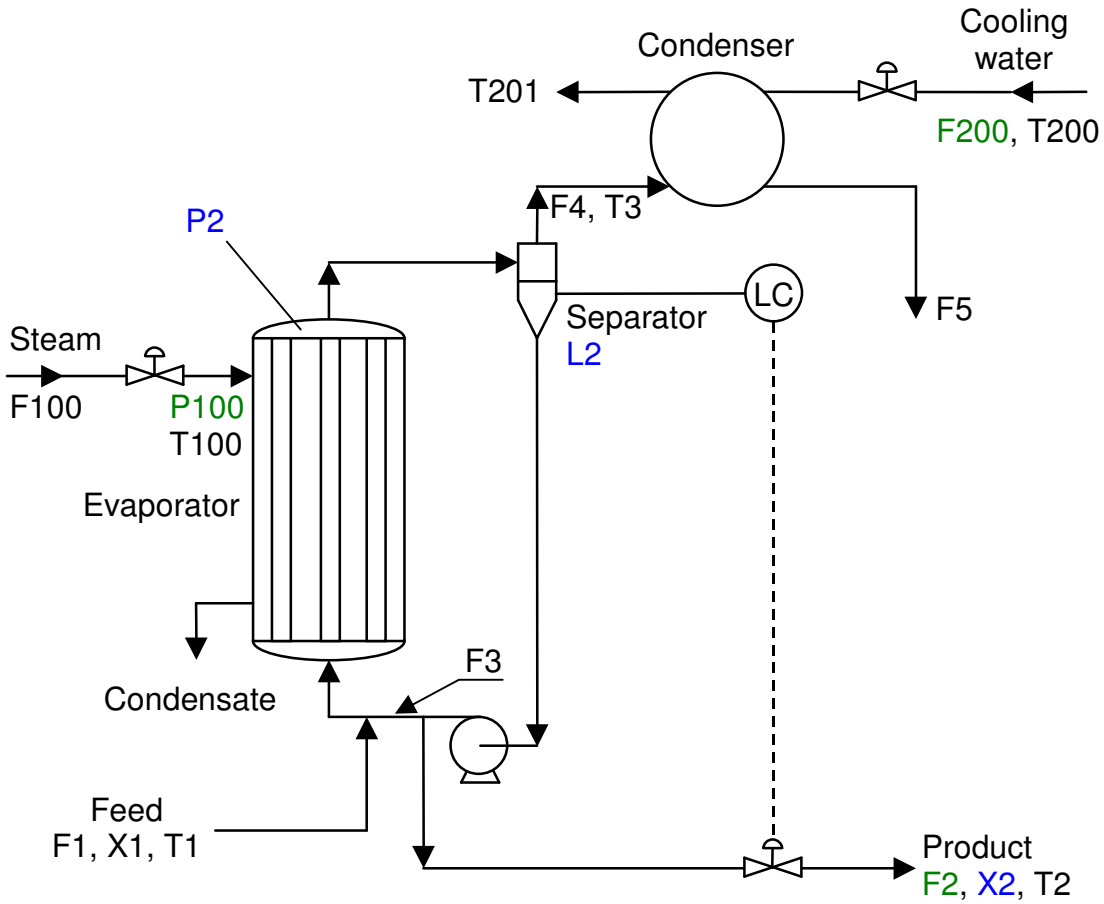

Fig. 7. Evaporator system

Output Variables

*L*2 – separator level,

*X*2 – product composition,

*P*2 – operating pressure

Manipulated variables

*F*2 – product flowrate,

*P*100 – steam pressure,

*F*200 – cooling water flowrate

* R.B. Newell, P.L. Lee: *Applied process control – a case study*; Prentice Hall, 1989

The predictive control algorithm

- An analytical DMC predictive algorithm
- The manipulated variables are: steam pressure $P100$ and cooling water flow $F200$
- The controlled variables are: product composition $X2$ and pressure in the evaporator $P2$
- The step responses obtained from environs of an operating point $P20$=50.5 kPa, $X20$=25%

Conditions of operation

- Economic performance index (cost of production)

$$J_E = c_1 \cdot \overline{P}100 - c_2 \cdot \overline{F}2$$

- Constraints put on manipulated variables:

$$P100 \leq 400 \text{ kPa}, \; F200 \leq 400 \text{ kg/min},$$

- The product should fulfill purity criteria; the constraint put on $\overline{X}2$ set–point was as follows

$$\overline{X}2_{\min} + \overline{r}_{\min}^{X2} \leq \overline{X}2$$

$$\overline{X}2_{\min} = X2_{\min} = 25\%, \; \overline{r}_{\min}^{X2} = 0.5\%$$

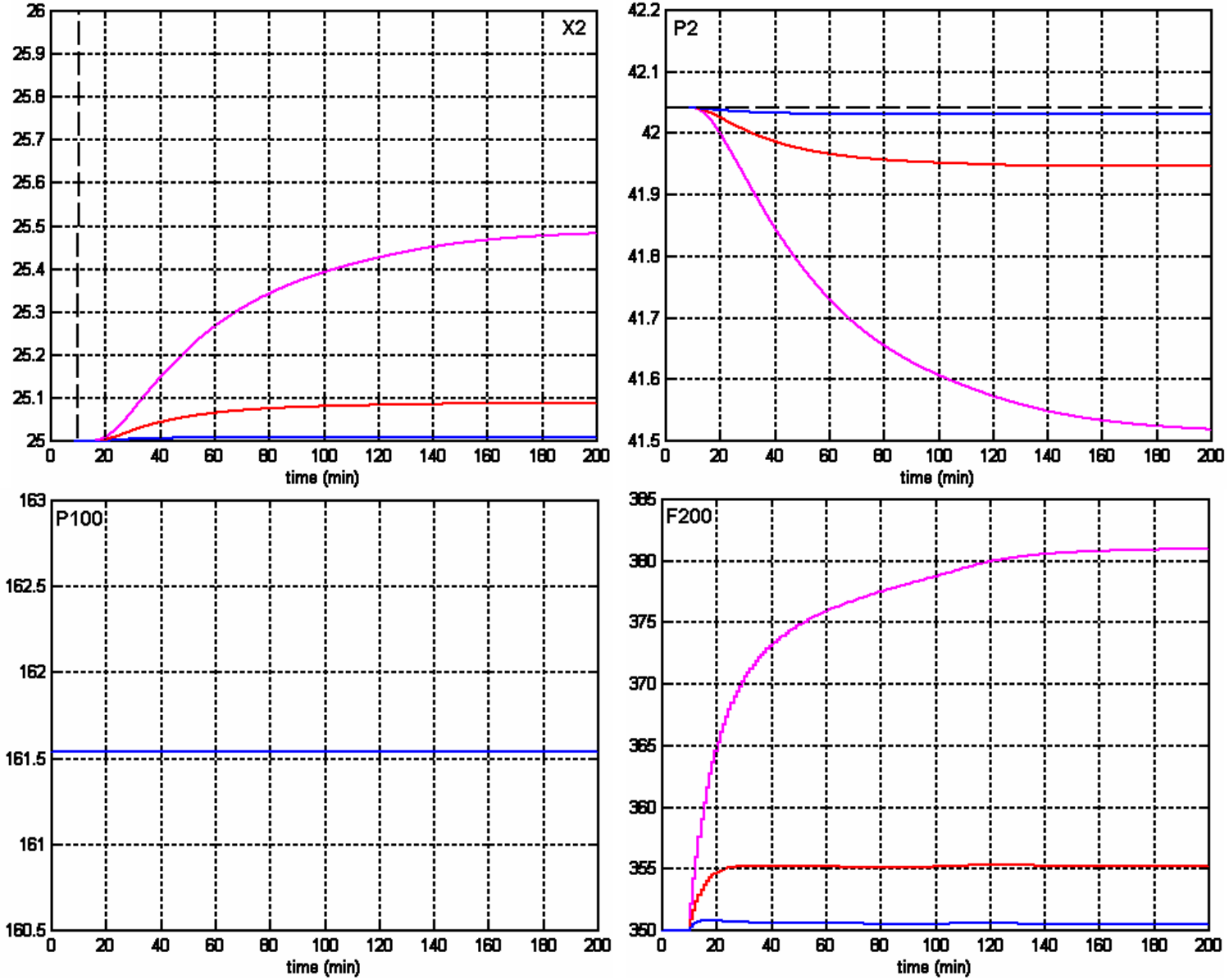

Fig. 8. Responses of the control system after blockade of the $P100$ actuator; κ_{P2} = 1, 10, 100, κ_{X2} = 1; above: output signals $X2$ and $P2$, below: control signals $P100$ and $F200$

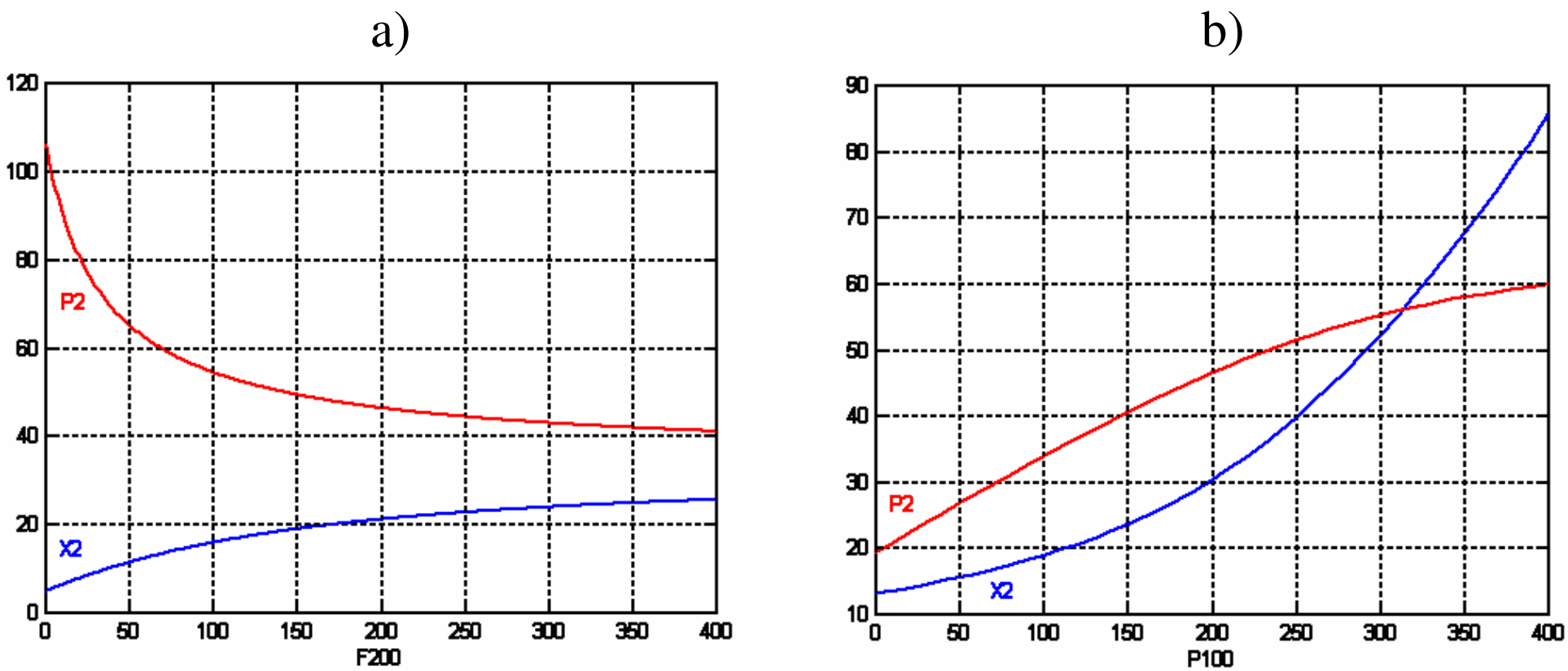

Fig. 9. Steady–state characteristics a) X2(F200) i P2(F200), b) X2(P100) i P2(P100), of the plant with blocked actuator of the manipulated variable a) $P100$, b) $F200$

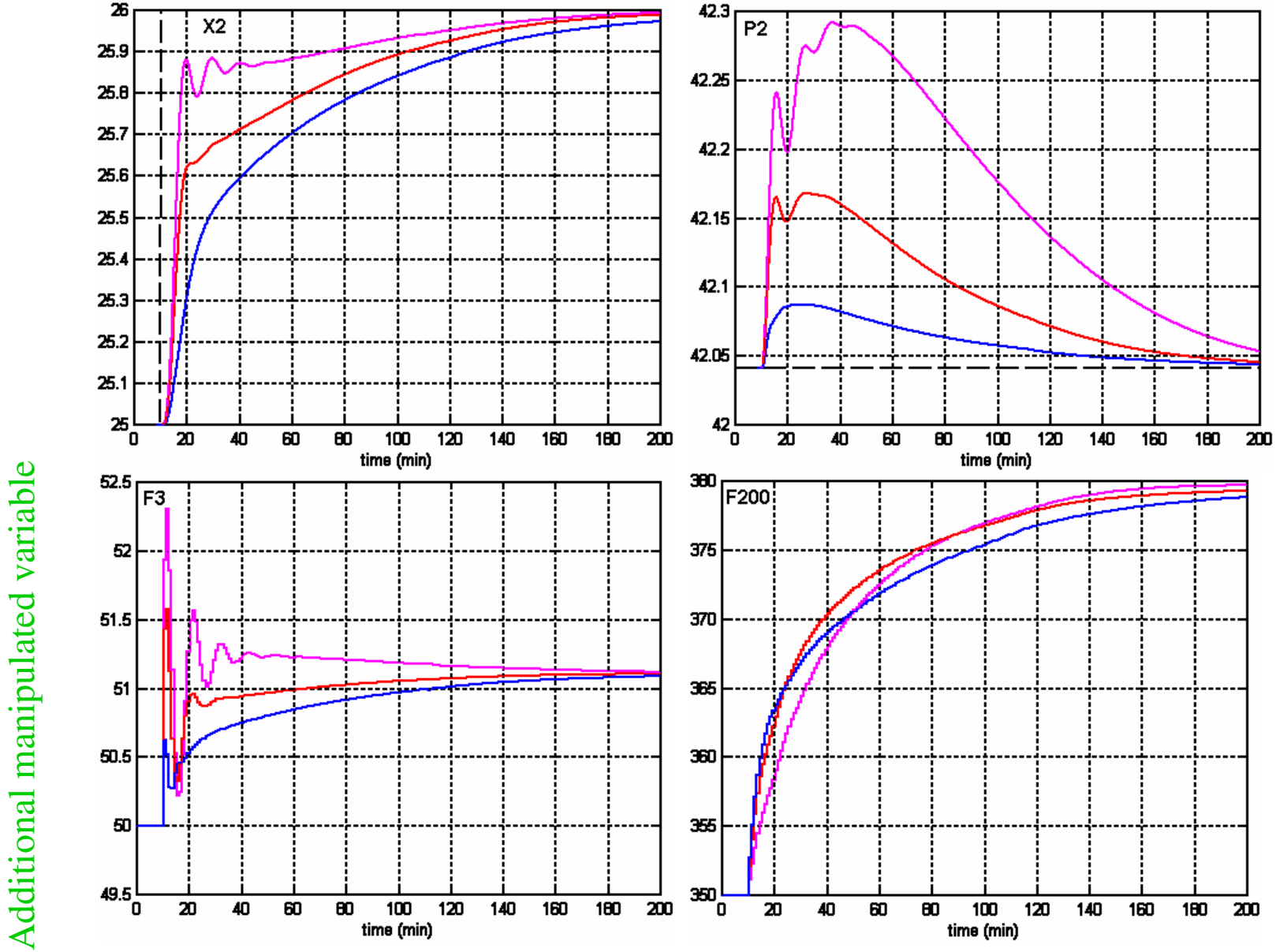

Fig. 10. Responses of the control system after blockade of the $P100$ actuator; κ_{P2} = 1, 10, 100, κ_{X2} = 1; above: output signals $X2$ and $P2$, below: control signals $F3$ and $F200$

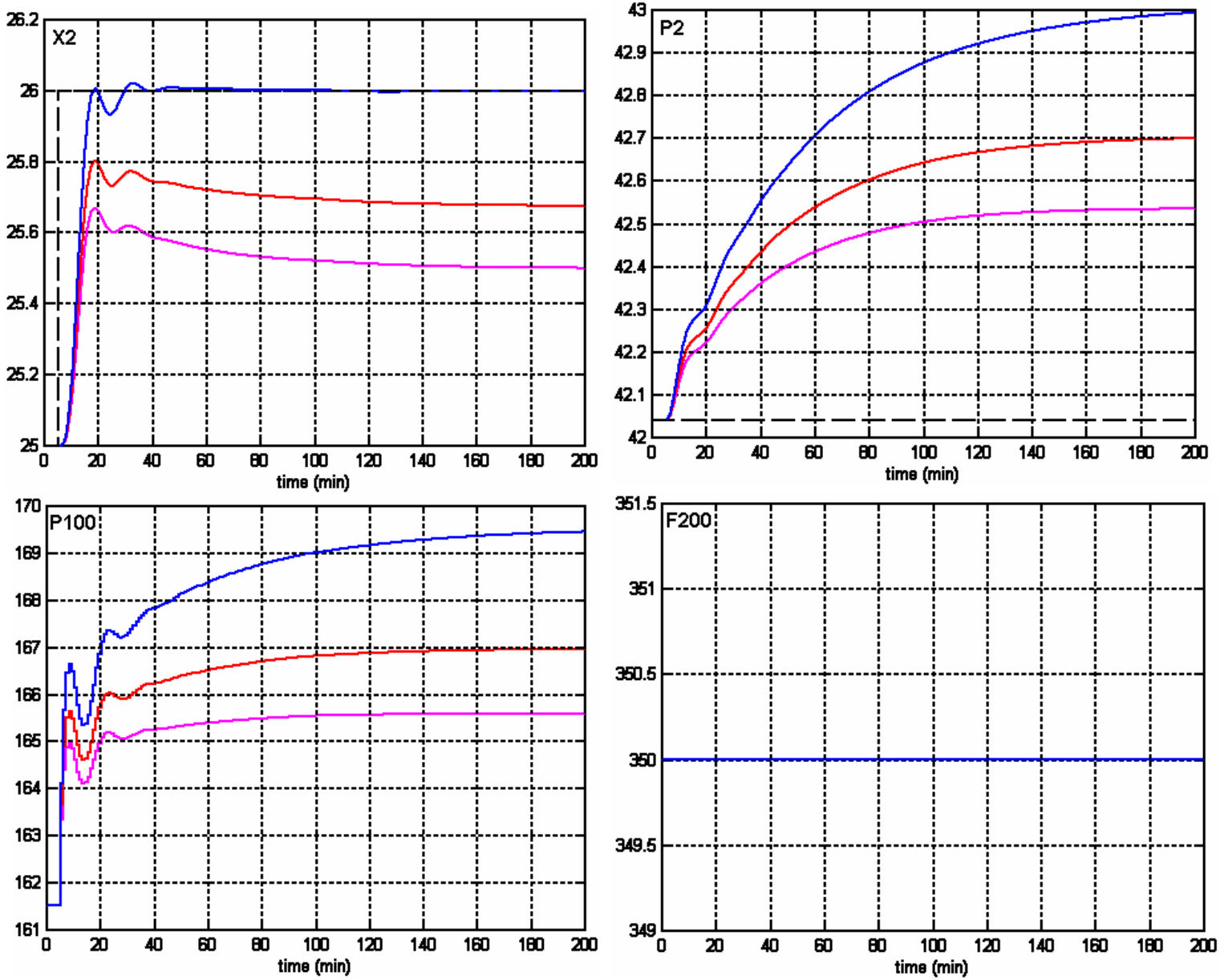

Fig. 11. Responses of the control system after blockade of the $F200$ actuator taken into consideration; $\kappa_{P2} = 1, 0.5, 0$, $\kappa_{X2} = 1$; above: output signals $X2$ and $P2$, below: control signals $P100$ and $F200$

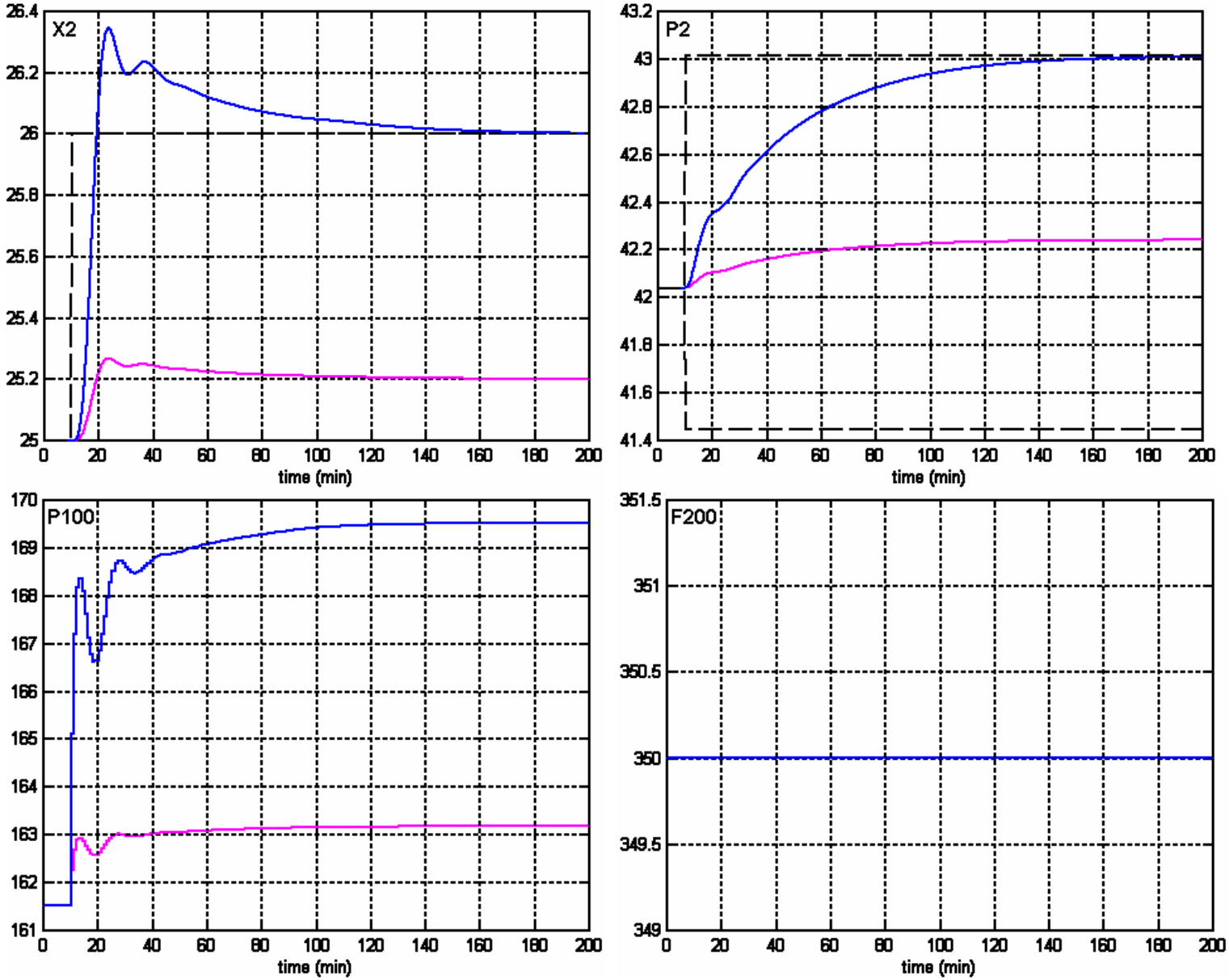

Fig. 12. Responses of the multilayer control system after blockade of the $F200$ actuator taken into consideration: only output constraint changed, also equality constraint added; above: output signals $X2$ and $P2$, below: control signals $P100$ and $F200$

Summary

- Relatively little complicated methods of actuator blockade toleration in control systems with analytical predictive controllers and output constraints were discussed
- The modifications can be performed in an efficient way; the changes consisting in elimination of rows or columns of the dynamic matrix can simplify the algorithm.
- The changes introduced into the economic optimization layer reduce the drawback of analytical predictive algorithms consisting in problems with taking into account output constraints. They generate very good results thanks to the employment of the exact steady–state control plant model.
- The efficacy of the methods was illustrated by results obtained in the example control system of the nonlinear MIMO plant