Institute of Control and Computation Engineering
Warsaw University of Technology

Output constraints in Fuzzy DMC algorithms with parametric uncertainty in process models

Piotr Marusak, Piotr Tatjewski

SCHEME OF PRESENTATION:

1. Introduction
2. Fuzzy DMC algorithm based on analytical formulation
   - 2.1. Conventional DMC algorithm reminder
   - 2.2. Fuzzy DMC algorithm structure
   - 2.3. Incorporating the manipulated variable constraints
3. Output constraints in cases of model parameter uncertainty
4. Output constraints in FDMC algorithms based on numerical formulation
5. Simulation example
6. Summary

Introduction

DMC algorithm (C.R. Cutler and B.L. Ramaker, 1979):

- a long–range horizon predictive control algorithm;
- many advantages – possibility of taking into account:
  - **constraints** (in particular output constraints),
  - future set–point changes,
  - anticipated disturbance changes.

FDMC controllers:

- combination of two ideas:
  - long–range horizon DMC predictive controller,
  - fuzzy Takagi–Sugeno (multiregional) approach;
- the advantages of both techniques are included

Conventional DMC algorithm based on analytical formulation

The basic idea of the DMC algorithm:

$$\min_{\Delta u} \sum_{i=1}^{p} \left(y_k^{sp} - y_{k+i}^{pred} \right)^2 + \lambda \cdot \sum_{i=0}^{s-1} \left(\Delta u_{k+i} \right)^2$$

$$y_{k+i}^{pred} = y_k + w_{k+i} + \Delta y_{k+i}, \; i = 1, \ldots, p,$$

A unique solution:

$$\boldsymbol{\Delta u} = (\boldsymbol{A}^T \cdot \boldsymbol{A} + \lambda \cdot \boldsymbol{I})^{-1} \cdot \boldsymbol{A}^T \cdot (\boldsymbol{e} - \boldsymbol{w}),$$

where

$$\Delta u = \left[\Delta u_k, \ldots, \Delta u_{k+s-1} \right]^T \text{ – future control increments,}$$

$$w = \left[w_{k+1}, \ldots, w_{k+p} \right]^T \text{ – depends on the past,}$$

$$e = \left[y_k^{sp} - y_k, \ldots, y_k^{sp} - y_k \right]^T$$

Only the first element of $\boldsymbol{\Delta u}$ is used at each time step.

The structure of the controller

$$u_k = u_{k-1} + r_0 \cdot e_k + \sum_{j=1}^{l} r_j \cdot \Delta u_{k-j}$$

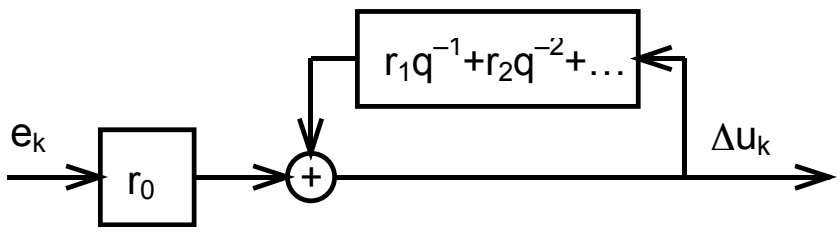

Fig. 1. Block diagram of the DMC controller

Taking control signal constraints into consideration

Control projection on the constraint set:

if $(\Delta u_k + u_{k-1}) > u_{max}$ then $\Delta u_k = u_{max} - u_{k-1}$,

if $(\Delta u_k + u_{k-1}) < u_{min}$ then $\Delta u_k = u_{min} - u_{k-1}$.

Fuzzy DMC algorithm based on analytical formulation

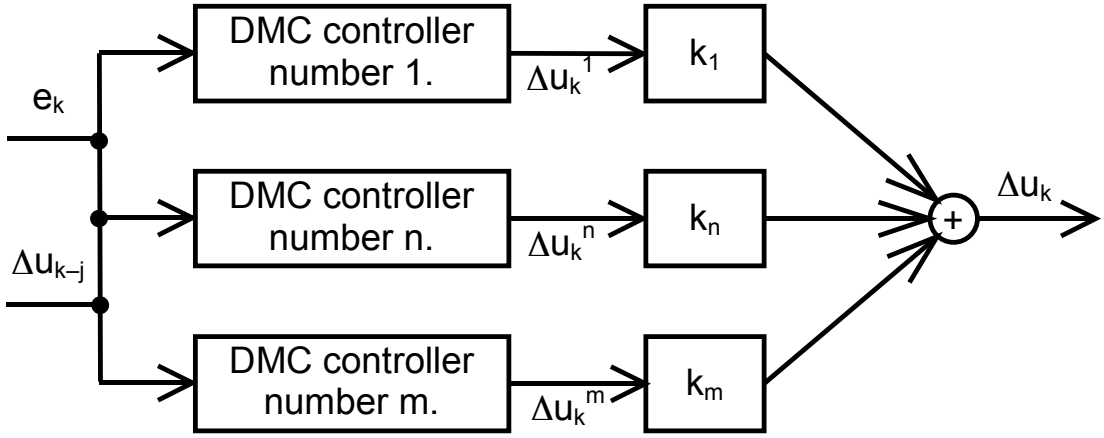

Fig. 2. Block diagram of the FDMC1 controller

— The FDMC1 controller is a combination of many sub–controllers.

— Parameters of sub–controllers are derived once, off–line.

— It is enough to sum up weighted outputs of those controllers in order to calculate the output value of the whole controller.

Example of a control plant with parameter uncertainty

$$\text{region 1: } y_{k+1} = b_1^1 \cdot y_k + c_1^1 \cdot u_k ,$$

$$\text{region 2: } y_{k+1} = b_1^2 \cdot y_k + c_1^2 \cdot u_k ,$$

$$b_1^1 = 0{,}7 ,\ c_1^1 = 0{,}8 ,\ b_1^2 = 0{,}3 ,\ c_1^2 = 0{,}2$$

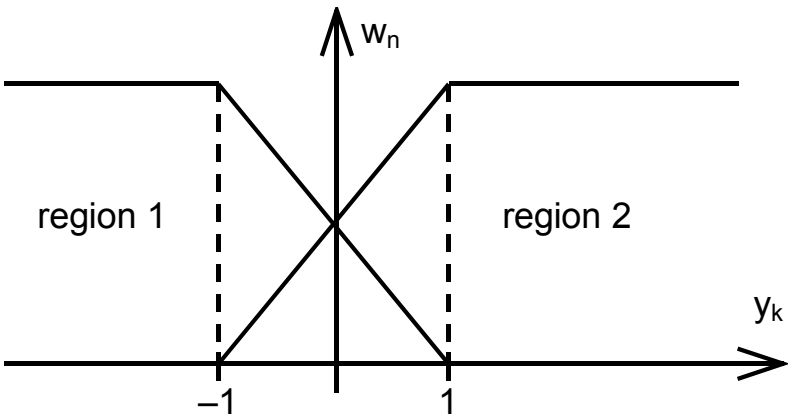

Fig. 3. Membership functions of the fuzzy model

Uncertainty of the control plant parameters:

$$b_1^1 = 0{,}7 \pm 0{,}05 ,\ b_1^2 = 0{,}3 \pm 0{,}05 ,$$

$$c_1^1 = 0{,}8 \pm 0{,}01 ,\ c_1^2 = 0{,}2 \pm 0{,}01 .$$

Output constraints in case of model parameter uncertainty

Considered constraints:

$$y_{k+1}^{pred} \geq y_{\min} \text{ and } y_{k+1}^{pred} \leq y_{\max},$$

*Transformation of constraints on output variable values (the **worst–case** approach, explained using **an example**):*

1. Formulation of equation which describes predicted output variable value;

$$y_{k+1} = b_1^1 \cdot y_k + c_1^1 \cdot u_k$$

2. Grouping of factors dependent on uncertain parameters or variables;

3. Assessment of minimum and maximum predicted output variable value (at least those factors which could be assessed);

$$y_{k+1,\min} = b_{1,\min}^1 \cdot y_k + c_1^1 \cdot u_k \text{ if } y_k > 0$$

$$y_{k+1,\min} = b_{1,\max}^1 \cdot y_k + c_1^1 \cdot u_k \text{ if } y_k < 0$$

$$y_{k+1,\max} = b_{1,\max}^1 \cdot y_k + c_1^1 \cdot u_k \text{ if } y_k > 0$$

$$y_{k+1,\max} = b_{1,\min}^1 \cdot y_k + c_1^1 \cdot u_k \text{ if } y_k < 0$$

4. Obtained equations are put under constraint's inequalities;

If y_k>0:

$$b_{1,\min}^{1} \cdot y_k + c_1^1 \cdot u_k \geq y_{\min}$$

$$b_{1,\max}^{1} \cdot y_k + c_1^1 \cdot u_k \leq y_{\max}$$

5. Transformation of equations to obtain constraints on manipulated variable values;

$$u_k \geq \frac{y_{\min} - b_{1,\min}^{1} \cdot y_k}{c_1^1}$$

$$u_k \leq \frac{y_{\max} - b_{1,\max}^{1} \cdot y_k}{c_1^1}$$

6. Assessment of right–hand side of inequalities;

$$u_k \geq \frac{y_{\min} - b_{1,\min}^{1} \cdot y_k}{c_{1,\min}^{1}} \quad \text{if numerator} > 0$$

$$u_k \geq \frac{y_{\min} - b_{1,\min}^{1} \cdot y_k}{c_{1,\max}^{1}} \quad \text{if numerator} < 0$$

$$u_k \leq \frac{y_{\max} - b_{1,\max}^{1} \cdot y_k}{c_{1,\max}^{1}} \quad \text{if numerator} > 0$$

$$u_k \leq \frac{y_{\max} - b_{1,\max}^{1} \cdot y_k}{c_{1,\min}^{1}} \quad \text{if numerator} < 0$$

Output constraints in FDMC algorithms based on numerical formulation

— All constraints are transformed into constraints put on manipulated variable increments

— Following substitution is made:

$$u_k = u_{k-1} + \Delta u_k$$

— In point 1. of the presented procedure we obtain:

$$y_{k+1} = \left(b_1^1 \cdot y_k + c_1^1 \cdot u_{k-1}\right) + c_1^1 \cdot \Delta u_k$$

— The next assessments and substitutions are analogous as previously

a)

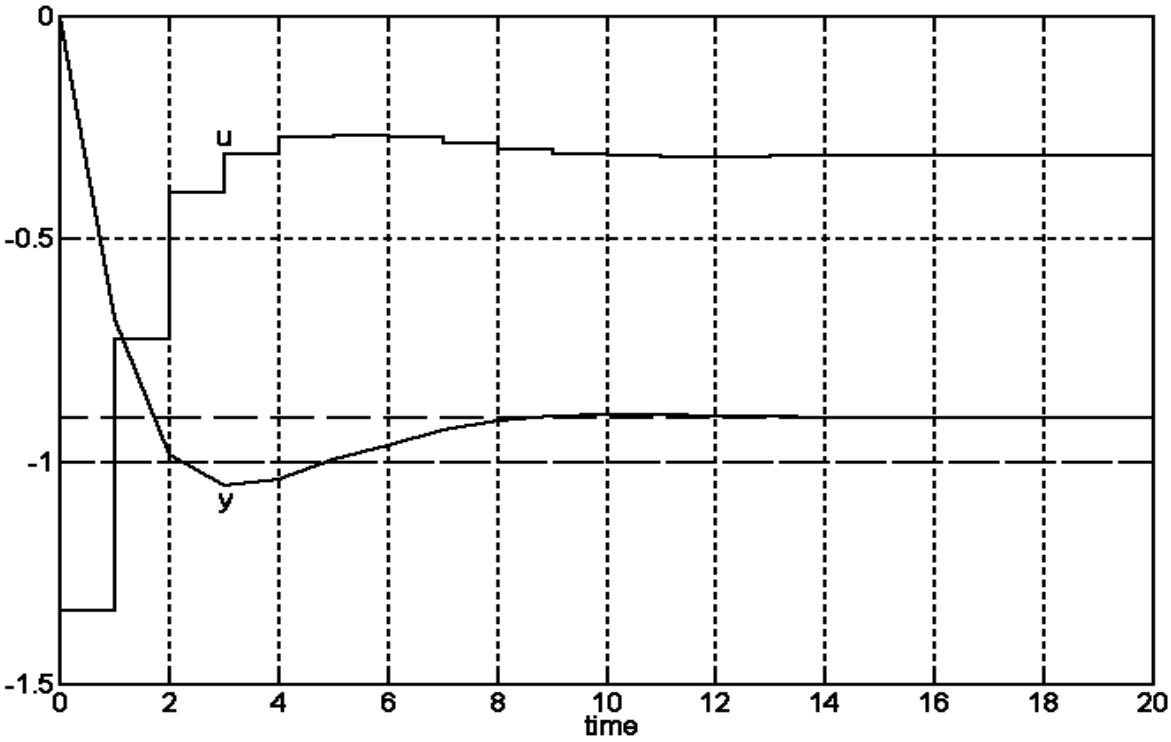

b)

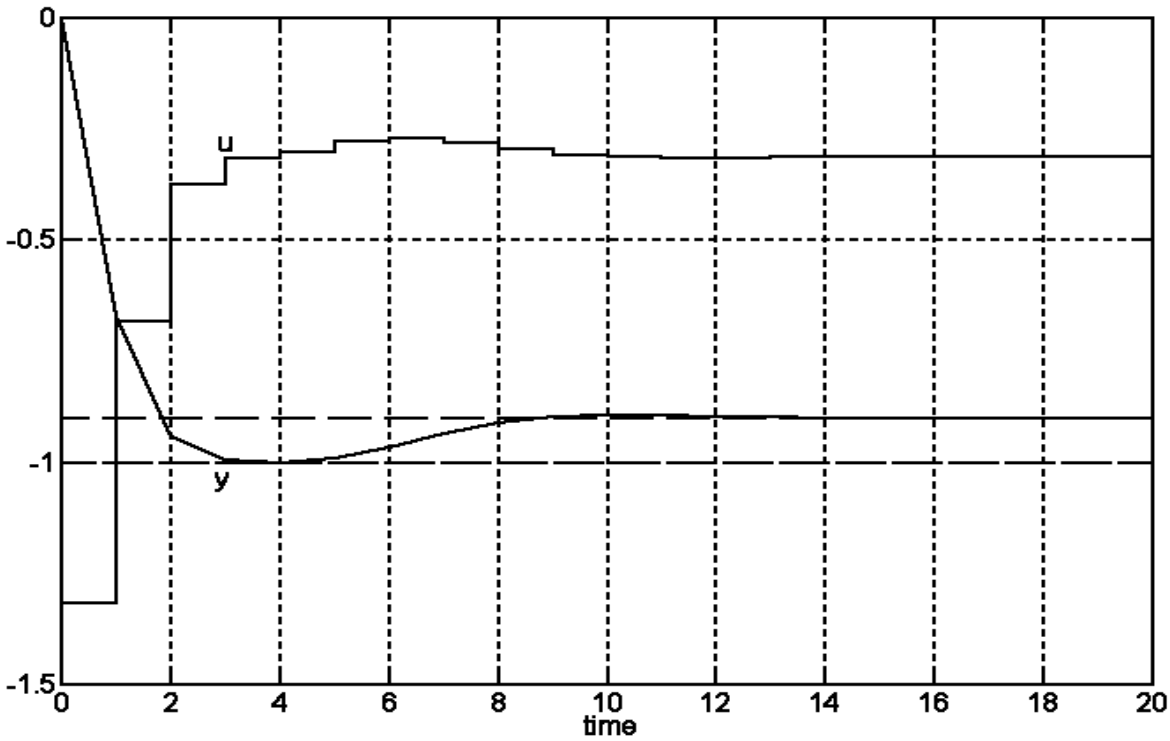

Fig. 4. Responses of the control system with FDMC controller; set–point change to $y_{zad} = 0{,}9$; with constrained output variable of a) control plant model, b) control plant; u – manipulated variable, y – output variable

Summary

- The presented method bases on the safety zone (worst–case) approach and consists of the following steps:

  1. we derive formulae for the minimum and maximum value of the predicted output variable,
  2. the obtained equations formulate inequality constraints on outputs,
  3. the inequalities are transformed into inequality constraints on values or changes of manipulated variables,
  4. a) FDMC controller based on analytical formulation

     the principle of control projection on the constraint set is used

     b) FDMC algorithms based on numerical quadratic optimization with constraints

     the obtained constraints are passed to the optimization procedure

- The proposed approach seems to be efficient and is relatively easy to use.